125 LD Light red



Axial decorative fans with LED lighting for extract ventilation

- Sound pressure level LpA at 3 m: 34
- Casing material: Plastic

	Unit of measurement	125 LD Light red
Connected air duct size	mm	125
Phases	-	1
Maximum supply voltage	V	240
Minimum supply voltage	V	220
Power supply frequency	Hz	50
Rated power	W	16
Unit current	A	0.1
Maximum airflow	m^3/h	167
Rotation speed at 50hz	-	2400
Sound pressure level LpA at 3 m	dB(A)	34
Weight	kg	0.89
Ambient air temperature min	°C	1
Ambient air temperature max	°C	40
Ingress protection rating	-	IP34
Impeller material	-	Plastic

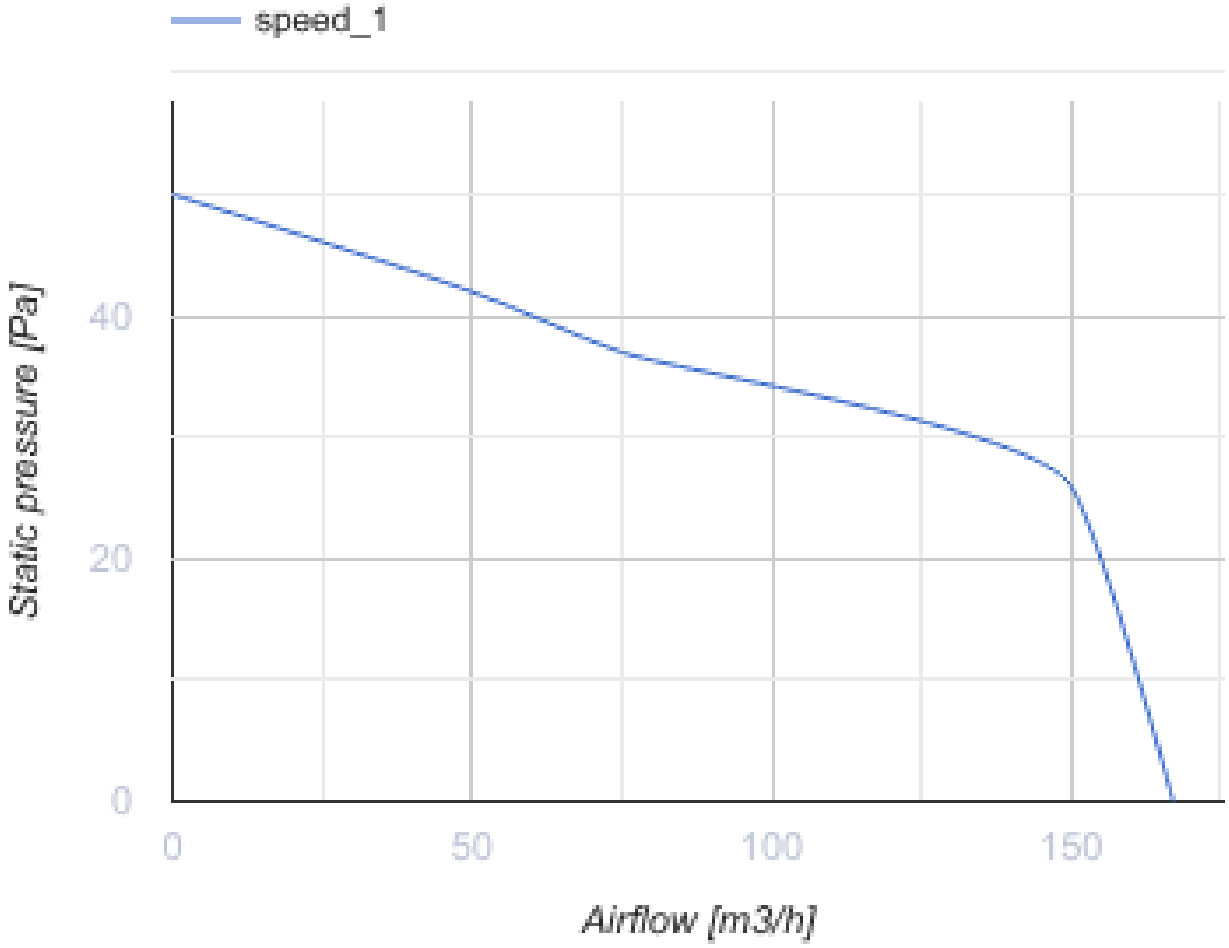

Dimensions

Ø D	B	L	L1
125	187	135	101

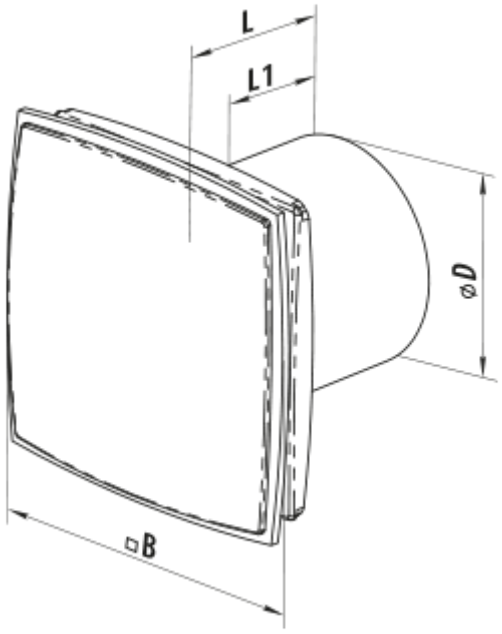

Accessories

Flanges

Name	Photo	Description
FO 125		The window flange