125 Base T L Q



Axial extract high-performance fans, compatible with the Design decorative panels

- Sound pressure level LpA at 3 m: 29
- Impeller type: Axial
- Casing material: Plastic
- Timer: Turn off timer
- Ball bearing

	Unit of measurement	125 Base T L Q
Connected air duct size	mm	125
Phases	-	1
Maximum supply voltage	V	240
Minimum supply voltage	V	220
Power supply frequency	Hz	50/60
Rated power	W	8
Unit current	A	0.053
Maximum airflow	m^3/h	147
Rotation speed at 50hz	-	1600
Sound pressure level LpA at 3 m	dB(A)	29
Ambient air temperature min	°C	1
Ambient air temperature max	°C	40
Ingress protection rating	-	IP24
Impeller material	-	Plastic

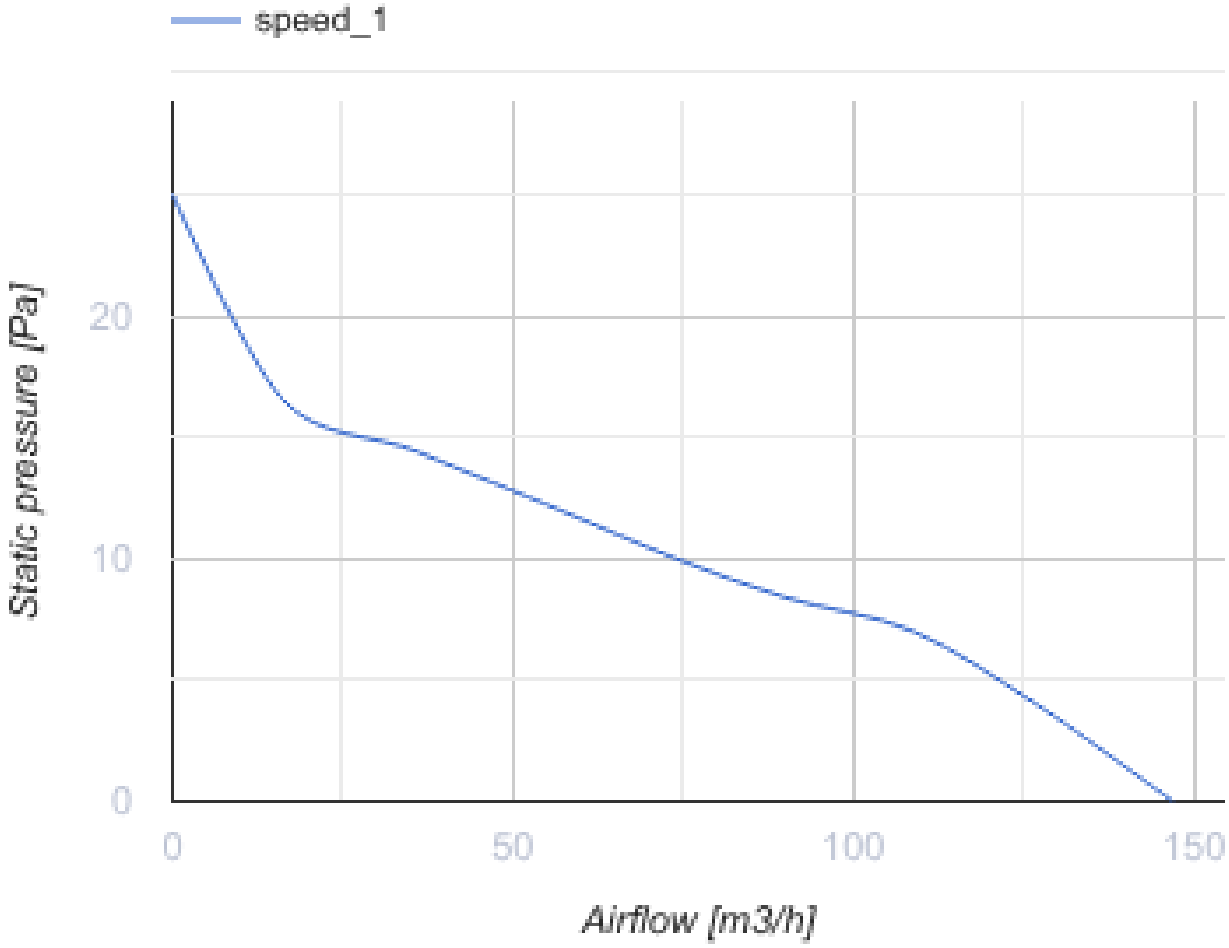

Dimensions

ØD	B	L	L1
124	165	88	16

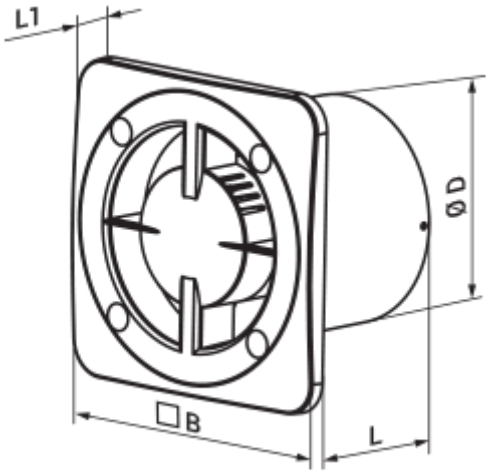

Accessories

Plastic

Name	Photo	Description
MV 120 V		Two-piece plastic grilles with angled louvers

Fittings

Name	Photo	Description
PVT 050/10		The adhesive PVC tape is an insulation tape made of plasticized PVC base covered with a glue layer
PVT 050/30		The adhesive PVC tape is an insulation tape made of plasticized PVC base covered with a glue layer
PVT 050/50		The adhesive PVC tape is an insulation tape made of plasticized PVC base covered with a glue layer
C 125		The clamps are designed for quick and reliable mounting and connection of various round ventilation system components. Clamps are made of stainless steel band

Flat duct

Name	Photo	Description
2805		Wall mounting

Flexible ducts

Name	Photo	Description
Polyvent N		Flexible uninsulated air duct made of metallized film

Decorative panels

Name	Photo	Description
FP 180 Plain		Removable decorative front panels are a universal solution allowing to choose the design of a fan or ventilation grille for any interior of a bathroom or kitchen.
FP 180 Plain red		Removable decorative front panels are a universal solution allowing to choose the design of a fan or ventilation grille for any interior of a bathroom or kitchen.

FP 180 Plain black sapphire		Removable decorative front panels are a universal solution allowing to choose the design of a fan or ventilation grille for any interior of a bathroom or kitchen.
FP 180 Plain metallic		Removable decorative front panels are a universal solution allowing to choose the design of a fan or ventilation grille for any interior of a bathroom or kitchen.
FP 180 Plain wing		Removable decorative front panels are a universal solution allowing to choose the design of a fan or ventilation grille for any interior of a bathroom or kitchen.
FPB 180/125 Disc		Removable decorative front panels are a universal solution allowing to choose the design of a fan or ventilation grille for any interior of a bathroom or kitchen.
FP 180 Aqua		Removable decorative front panels are a universal solution allowing to choose the design of a fan or ventilation grille for any interior of a bathroom or kitchen.
FP 180 Mars		Removable decorative front panels are a universal solution allowing to choose the design of a fan or ventilation grille for any interior of a bathroom or kitchen.
FP 180 Mystery		Removable decorative front panels are a universal solution allowing to choose the design of a fan or ventilation grille for any interior of a bathroom or kitchen.
FP 180 Plain chrome		Removable decorative front panels are a universal solution allowing to choose the design of a fan or ventilation grille for any interior of a bathroom or kitchen.
FP 180 Plain alumat		Removable decorative front panels are a universal solution allowing to choose the design of a fan or ventilation grille for any interior of a bathroom or kitchen.
FPB 180/125 Glass-1		Removable decorative front panels are a universal solution allowing to choose the design of a fan or ventilation grille for any interior of a bathroom or kitchen.
FPB 180/125 Glass-1 red		Removable decorative front panels are a universal solution allowing to choose the design of a fan or ventilation grille for any interior of a bathroom or kitchen.
FPB 180/125 Glass-1 black		Removable decorative front panels are a universal solution allowing to choose the design of a fan or ventilation grille for any interior of a bathroom or kitchen.
FP 180 Plain gold		Removable decorative front panels are a universal solution allowing to choose the design of a fan or ventilation grille for any interior of a bathroom or kitchen.
FP 180 Plain dim		Removable decorative front panels are a universal solution allowing to choose the design of a fan or ventilation grille for any interior of a bathroom or kitchen.

Backdraft dampers

Name	Photo	Description

KO 125		Back valve is designed for domestic fan

Window vents

Name	Photo	Description
PO 400		Window ventilators for supply ventilation

Plastic

Name	Photo	Description
MV 122 VK		Supply and exhaust hoods

Metal

Name	Photo	Description
MVM 122 V N		Exhaust metal hoods