100 X black



Axial decorative fans with colored inserts for extract ventilation

- Sound pressure level LpA at 3 m: 33
- Casing material: Plastic

	Unit of measurement	100 X black
Connected air duct size	mm	100
Phases	-	1
Maximum supply voltage	V	240
Minimum supply voltage	V	220
Power supply frequency	Hz	50/60
Rated power	W	14
Unit current	A	0.085
Maximum airflow	m^3/h	89
Rotation speed at 50hz	-	2300
Sound pressure level LpA at 3 m	dB(A)	33
Weight	kg	0.61
Ambient air temperature min	°C	1
Ambient air temperature max	°C	40
Ingress protection rating	-	IP24
Impeller material	-	Plastic

Dimensions

Ø D	B	H	L	L1
100	152	120	125	30

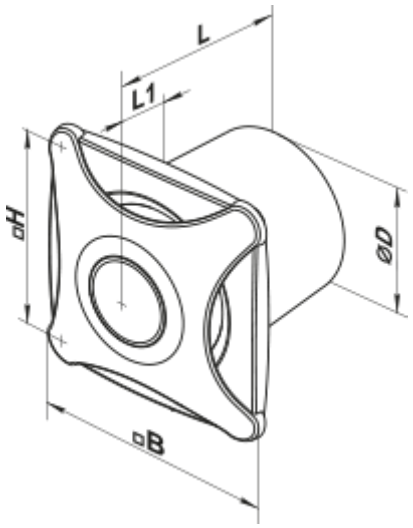

Ecodesign

Trademark	Vents					
Model	100 X black					
Specific energy consumption (SEC) (kWh/(m²/a))	Cold		Average		Warm	
	-30	B	-14	E	-5	F
Type of ventilation unit	Unidirectional					
Type of drive installed	Multi-speed					
Type of heat recovery system	None					
Maximum flow rate (m³/h)	89					
Electric power input (W)	14					
Reference flow rate (m³/s)	0.017					
Specific power input (SPI) (W/(m³/h))	0.101					
Control typology	Manual control					
Maximum external leakage rates (%)	2.7					
Sound power level (dB(A))	53					
Declared typology	RVU UVU					
The annual electricity consumption (AEC) (kWh/a)	Cold		Average		Warm	
	100		100		100	
The annual heating saved (AHS) (kWh/a)	Cold		Average		Warm	
	3400		1700		800	