# 100 VKOk L

Axial high-performance inline fans for extract or supply ventilation

- Sound pressure level LpA at 3 m: 37
- Casing material: Plastic
- Ball bearing



| | Unit of measurement | 100 VKOk L |
|---|---|---|
| Connected air duct size | mm | 100 |
| Phases | - | 1 |
| Minimum supply voltage | V | 220 |
| Maximum supply voltage | V | 240 |
| Power supply frequency | Hz | 50/60 |
| Rated power | W | 14 |
| Unit current | A | 0.085 |
| Maximum airflow | m³/h | 105 |
| Rotation speed at 50hz | - | 2300 |
| Sound pressure level LpA at 3 m | dB(A) | 37 |
| Weight | kg | 0.41 |
| Ambient air temperature min | °C | 1 |
| Ambient air temperature max | °C | 40 |
| Ingress protection rating | - | IPX4 |
| Impeller material | - | Plastic |

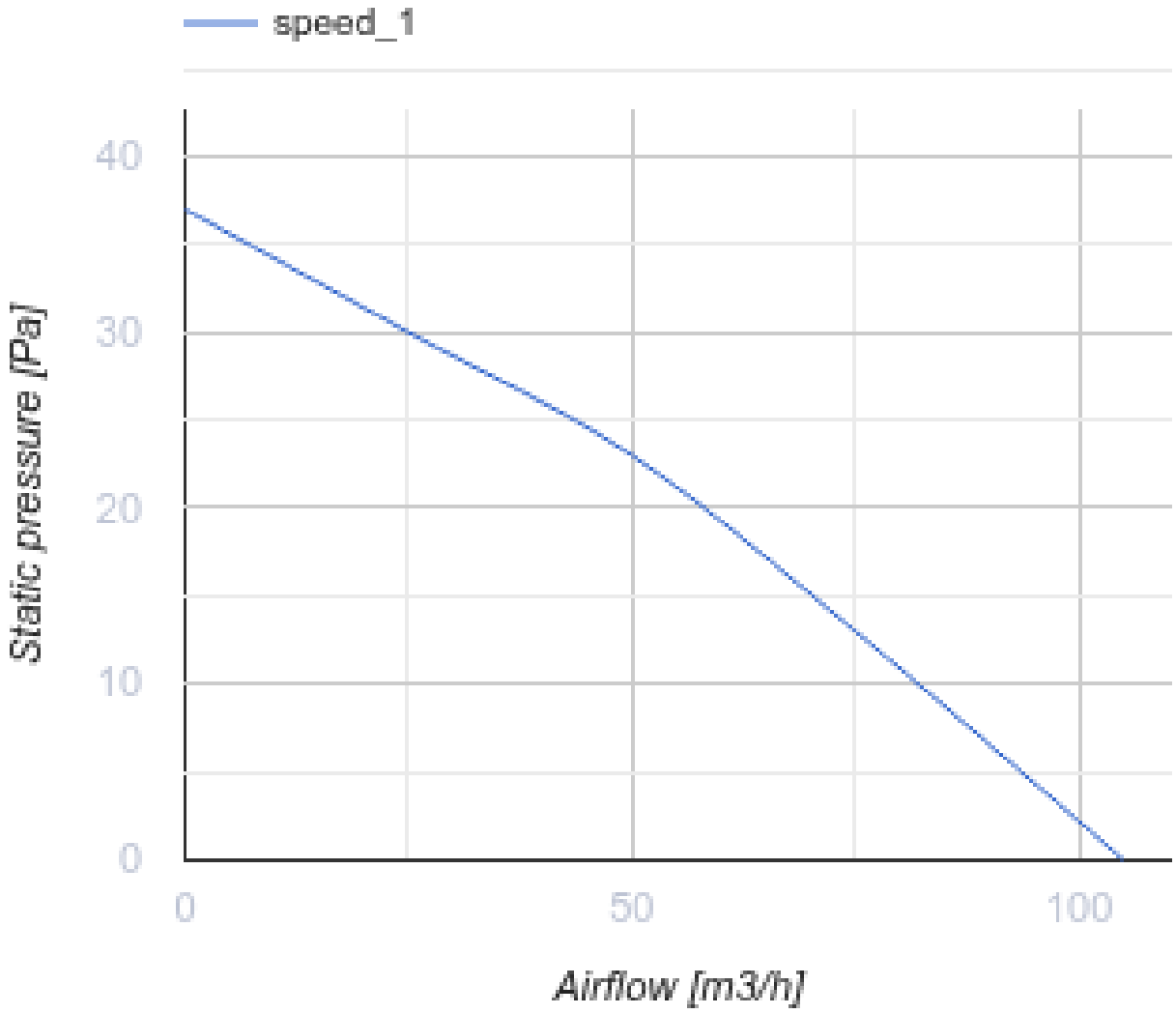


## Dimensions

| ØD | ØD1 | B | B1 | H | L | L1 | L2 | L3 |
|---|---|---|---|---|---|---|---|---|
| 100 | 104 | 160 | 144 | 114 | 91 | 31 | 45 | 29 |

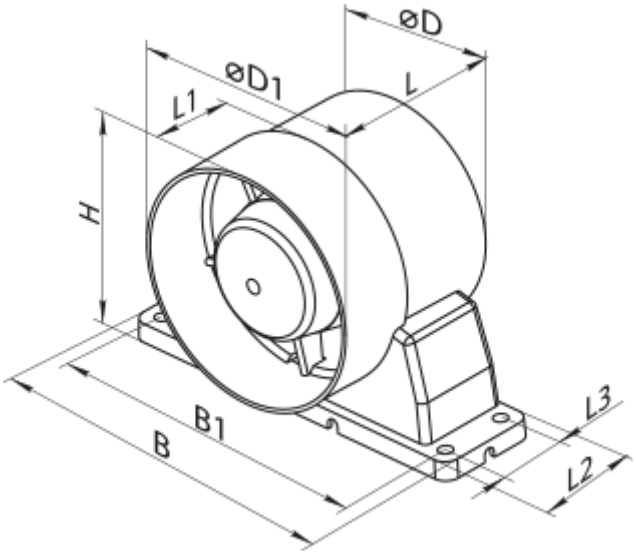


## Accessories

### Plastic

| Name | Photo | Description |
|---|---|---|
| MV 100 VR |  | Two-piece plastic grilles with angled louvers |
| MV 100 V |  | Two-piece plastic grilles with angled louvers |

### Fittings

| Name | Photo | Description |
|---|---|---|
| PVT 050/10 |  | The adhesive PVC tape is an insulation tape made of plasticized PVC base covered with a glue layer |
| PVT 050/30 |  | The adhesive PVC tape is an insulation tape made of plasticized PVC base covered with a glue layer |
| PVT 050/50 |  | The adhesive PVC tape is an insulation tape made of plasticized PVC base covered with a glue layer |
| C 100 |  | The clamps are designed for quick and reliable mounting and connection of various round ventilation system components. Clamps are made of stainless steel band |

### Flat duct

| Name | Photo | Description |
|---|---|---|

| | | |
|---|---|---|
| 1805 |  | Wall mounting |

### Flexible ducts

| Name | Photo | Description |
|---|---|---|
| Polyvent N |  | Flexible uninsulated air duct made of metallized film |

### Window vents

| Name | Photo | Description |
|---|---|---|
| PO 400 |  | Window ventilators for supply ventilation |

### Plastic

| Name | Photo | Description |
|---|---|---|
| MV 102 VK |  | Supply and exhaust hoods |

### Metal

| Name | Photo | Description |
|---|---|---|
| MVM 102 V N |  | Exhaust metal hoods |