100 VKO1k L turbo

Axial high-performance inline fans for extract or supply ventilation with high performance

- Sound pressure level LpA at 3 m: 37
- Casing material: Plastic
- Ball bearing

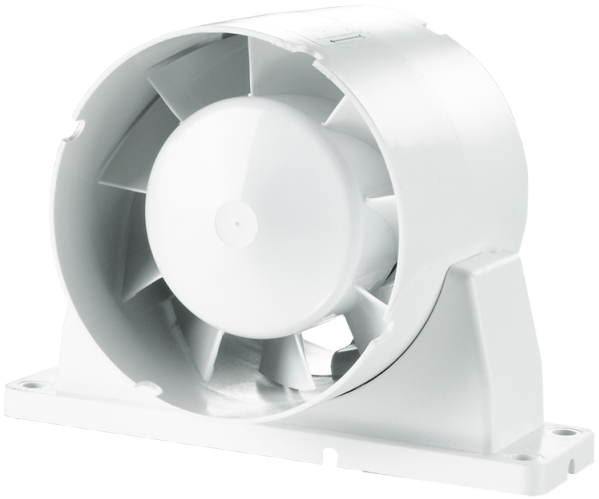

	Unit of measurement	100 VKO1k L turbo
Connected air duct size	mm	100
Phases	-	1
Minimum supply voltage	V	220
Maximum supply voltage	V	240
Power supply frequency	Hz	50/60
Rated power	W	16
Unit current	A	0.1
Maximum airflow	m³/h	137
Rotation speed at 50hz	-	2300
Sound pressure level LpA at 3 m	dB(A)	37
Weight	kg	0.49
Ambient air temperature min	°C	1
Ambient air temperature max	°C	40
Ingress protection rating	-	IPX4
Impeller material	-	Plastic

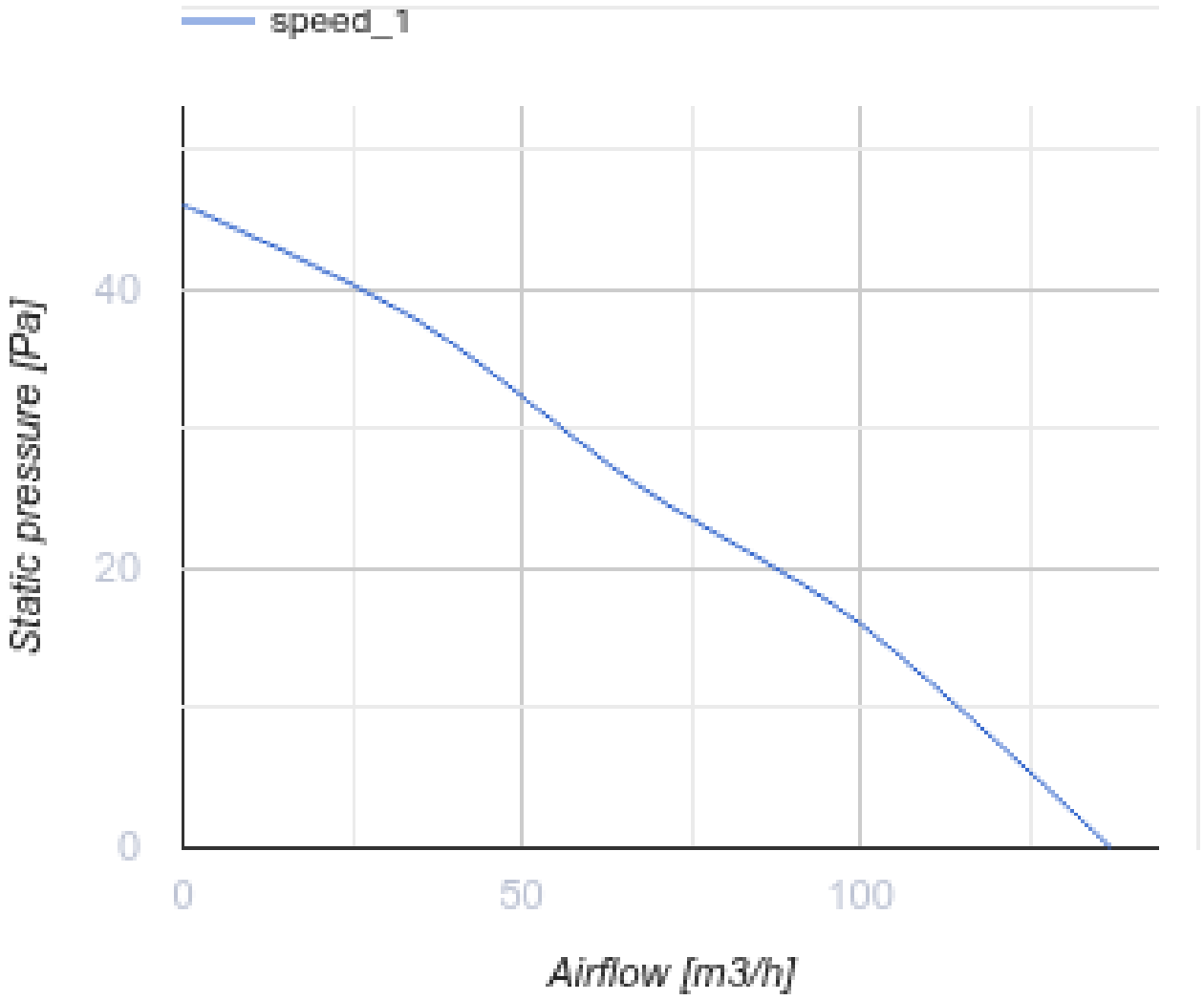

Dimensions

ØD	Ød	B	B1	H	L	L1	L2	L3
100	59	160	144	110	100	10	45	29

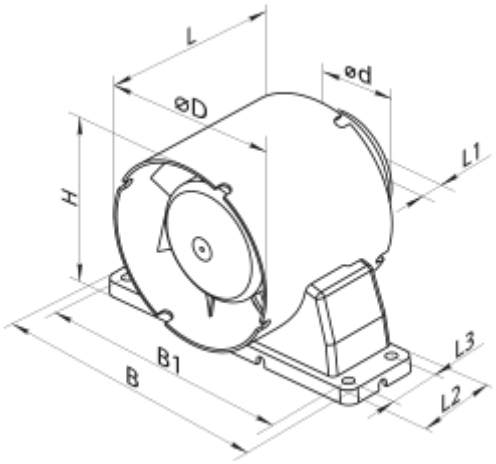
L
ØD
Ød
L1
H
B1
B
L3
L2