100 VKO 12

Axial high-performance inline fans for extract or supply ventilation

- Sound pressure level LpA at 3 m: 36
- Casing material: Plastic



	Unit of measurement	100 VKO 12
Connected air duct size	mm	100
Phases	-	1
Minimum supply voltage	V	12
Maximum supply voltage	V	12
Power supply frequency	Hz	50/60
Rated power	W	14
Unit current	A	1.5
Maximum airflow	m^3/h	92
Rotation speed at 50hz	-	2200
Sound pressure level LpA at 3 m	dB(A)	36
Weight	kg	0.4
Ambient air temperature min	°C	1
Ambient air temperature max	°C	40
Ingress protection rating	-	IPX4
Impeller material	-	Plastic

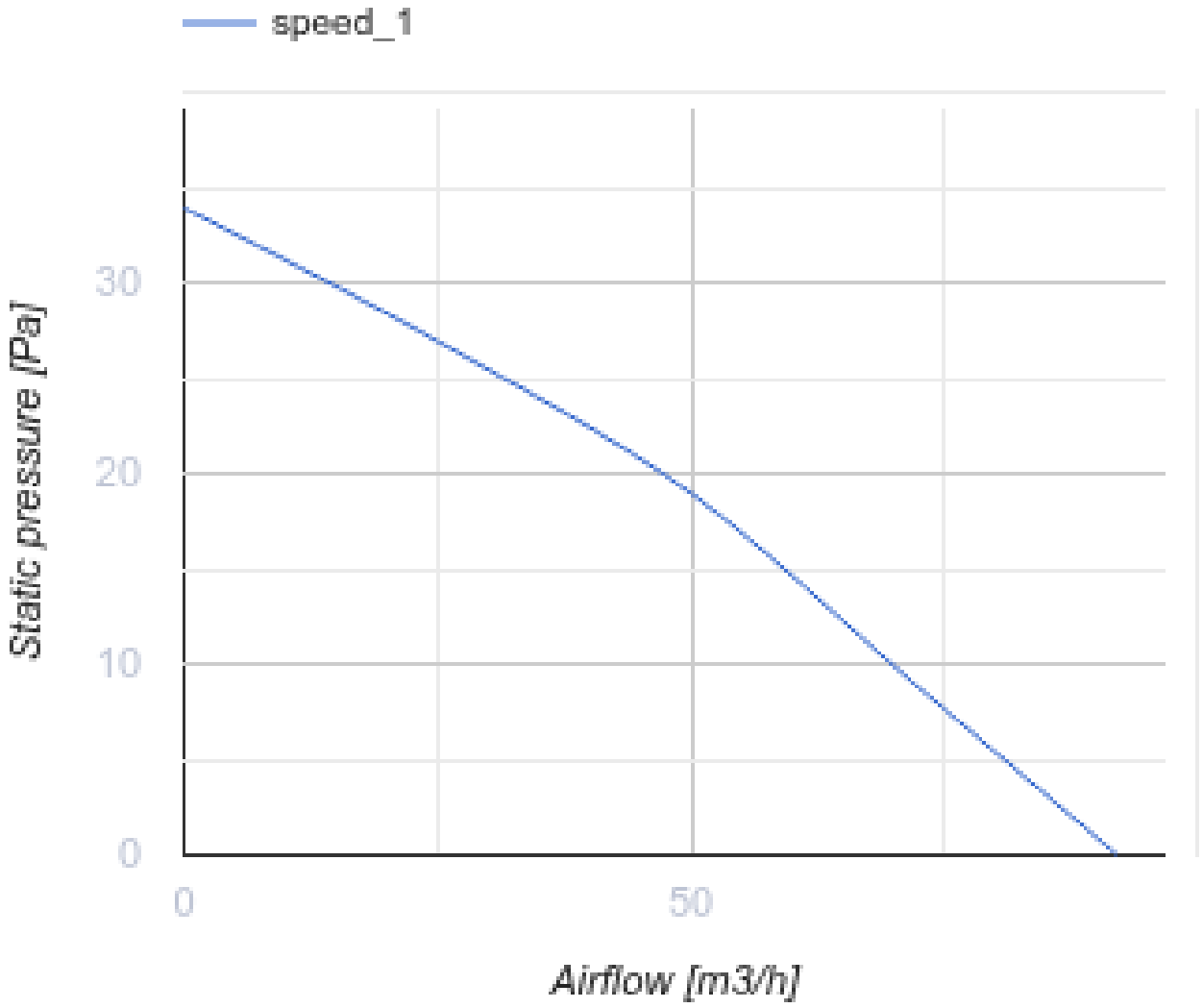

Dimensions

ØD	ØD1	L	L1
100	104	91	31

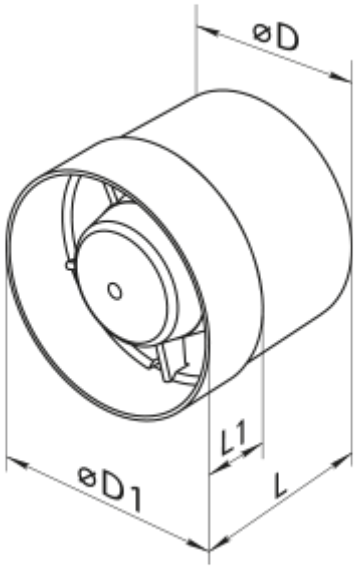

Accessories

Plastic

Name	Photo	Description
MV 100 VR		Two-piece plastic grilles with angled louvers
MV 100 V		Two-piece plastic grilles with angled louvers

Fittings

Name	Photo	Description
PVT 050/10		The adhesive PVC tape is an insulation tape made of plasticized PVC base covered with a glue layer
PVT 050/30		The adhesive PVC tape is an insulation tape made of plasticized PVC base covered with a glue layer
PVT 050/50		The adhesive PVC tape is an insulation tape made of plasticized PVC base covered with a glue layer
C 100		The clamps are designed for quick and reliable mounting and connection of various round ventilation system components. Clamps are made of stainless steel band

Flat duct

Name	Photo	Description

1805		Wall mounting

Flexible ducts

Name	Photo	Description
Polyvent N		Flexible uninsulated air duct made of metallized film

Backdraft dampers

Name	Photo	Description
KO 100		Back valve is designed for domestic fan
KO1 100		Back valve is designed for domestic fan

Window vents

Name	Photo	Description
PO 400		Window ventilators for supply ventilation

Plastic

Name	Photo	Description
MV 102 VK		Supply and exhaust hoods

Power supplies

Name	Photo	Description
TRF-220/12-25 K		Insulating transformer

Metal

Name	Photo	Description
MVM 102 V N		Exhaust metal hoods

Ecodesign

Trademark	Vents					
Model	100 VKO 12					
Specific energy consumption (SEC) (kWh/(m²/a))	Cold		Average		Warm	
	-30	B	-14	E	-5	F
Type of ventilation unit	Unidirectional					
Type of drive installed	Multi-speed					
Type of heat recovery system	None					
Maximum flow rate (m³/h)	92					
Electric power input (W)	14					
Reference flow rate (m³/s)	0.018					
Specific power input (SPI) (W/(m³/h))	0.098					
Control typology	Manual control					
Maximum external leakage rates (%)	2.7					
Declared typology	RVU UVU					
Sound power level (dB(A))	57					
The annual electricity consumption (AEC) (kWh/a)	Cold		Average		Warm	
	100		100		100	
The annual heating saved (AHS) (kWh/a)	Cold		Average		Warm	
	3400		1700		800	