100 Stone Grey

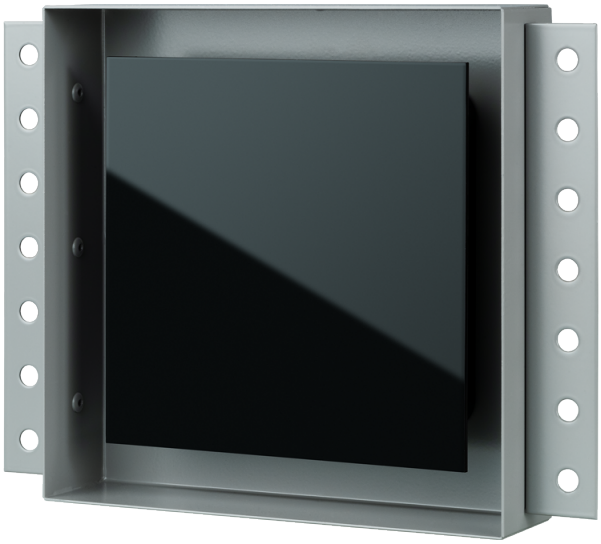

Flush-mounted axial fans for extract ventilation

- Sound pressure level LpA at 3 m: 33
- Impeller type: Axial
- Casing material: Metal

	Unit of measurement	100 Stone Grey
Connected air duct size	mm	100
Maximum supply voltage	V	240
Minimum supply voltage	V	220
Power supply frequency	Hz	50/60
Rated power	W	14
Unit current	A	0.1
Maximum airflow	m^3/h	90
Rotation speed at 50hz	-	2300
Sound pressure level LpA at 3 m	dB(A)	33
Weight	kg	1.28
Ambient air temperature min	°C	1
Ambient air temperature max	°C	40
Ingress protection rating	-	IP24

Dimensions

ØD	H	B	L	L1
99	204	264	86	48

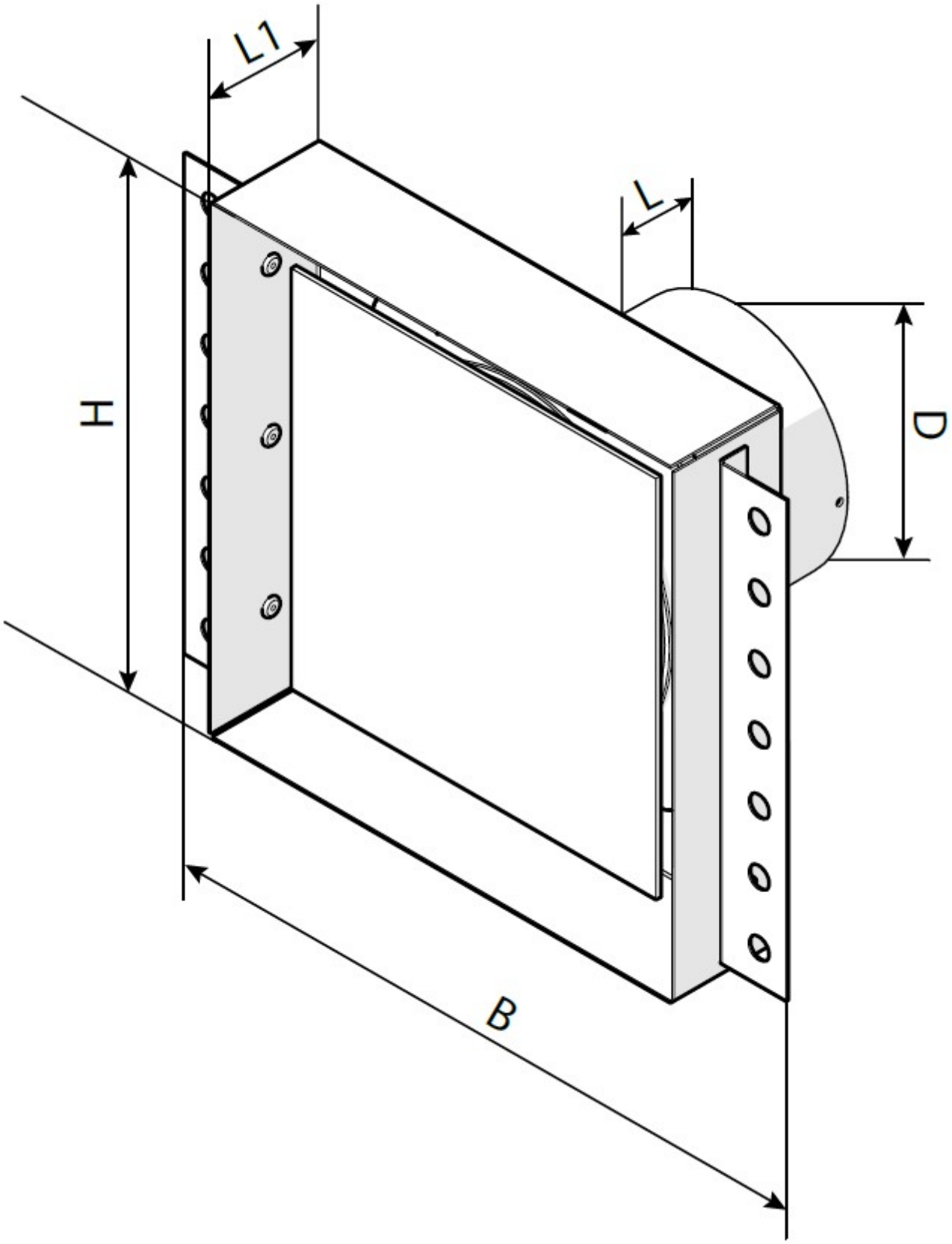
L1
L
H
D
B

Ecodesign

Trademark	Vents					
Model	100 Stone Grey					
Specific energy consumption (SEC) (kWh/(m²/a))	Cold		Average		Warm	
	-28.7	B	-12.3	E	-2.9	F
Type of ventilation unit	Unidirectional					
Type of drive installed	Single speed					
Type of heat recovery system	None					
Maximum flow rate (m³/h)	90					
Electric power input (W)	14					
Reference flow rate (m³/s)	0.018					
Specific power input (SPI) (W/(m³/h))	0.156					
Control typology	Manual control					
Maximum external leakage rates (%)	2.7					
Sound power level (dB(A))	53					
The annual electricity consumption (AEC) (kWh/a)	Cold		Average		Warm	
	195		195		195	
The annual heating saved (AHS) (kWh/a)	Cold		Average		Warm	
	3355		1715		776	