100 Solid One EC T1



Silent extract fan with a decorative panel and an EC motor

- Sound pressure level LpA at 3 m: 25
- Impeller type: Mixed-flow
- Casing material: Plastic
- Backdraft protection: Backdraft damper
- Timer: Turn on timer
- Ball bearing

	Unit of measurement	100 Solid One EC T1
Connected air duct size	mm	100
Minimum supply voltage	V	220
Maximum supply voltage	V	240
Power supply frequency	Hz	50/60
Rated power	W	3
Unit current	A	0.03
Maximum airflow	m^3/h	90
Rotation speed at 50hz	-	2100
Sound pressure level LpA at 3 m	dB(A)	25
Ingress protection rating	-	IP44 Zone 1
Impeller material	-	Plastic

Dimensions

ØD	L	L1	W
99	79	38	160

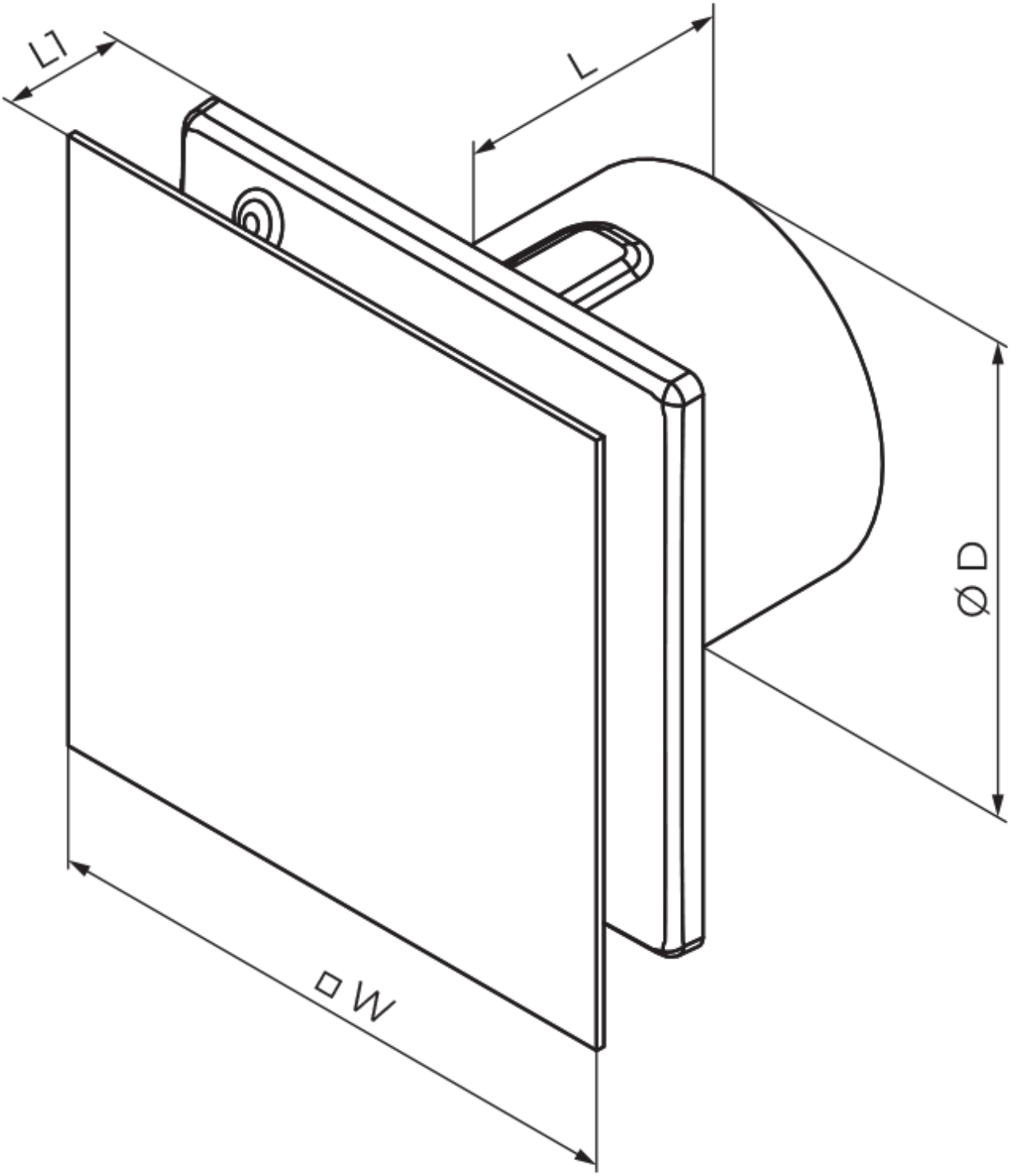

Accessories

Plastic

Name	Photo	Description

MV 100		Two-piece plastic grilles with angled louvers

Flat duct

Name	Photo	Description
1805		Wall mounting

Flexible ducts

Name	Photo	Description
Polyvent N		Flexible uninsulated air duct made of metallized film

Backdraft dampers

Name	Photo	Description
KO 100		Back valve is designed for domestic fan
KO1 100		Back valve is designed for domestic fan

Fittings

Name	Photo	Description
C 100		The clamps are designed for quick and reliable mounting and connection of various round ventilation system components. Clamps are made of stainless steel band

Window vents

Name	Photo	Description
PO 400		Window ventilators for supply ventilation