# 100 Solid Glass V Red



Axial fans with glass panels for extract ventilation suitable for use in Zone 1

- Sound pressure level LpA at 3 m: 26
- Casing material: Plastic
- Backdraft protection: Backdraft damper
- Pull cord

| | Unit of measurement | 100 Solid Glass V Red |
|---|---|---|
| Connected air duct size | mm | 100 |
| Minimum supply voltage | V | 220 |
| Maximum supply voltage | V | 240 |
| Power supply frequency | Hz | 50 |
| Rated power | W | 8 |
| Unit current | A | 0.5 |
| Maximum airflow | m³/h | 85 |
| Rotation speed at 50hz | - | 2100 |
| Sound pressure level LpA at 3 m | dB(A) | 26 |
| Weight | kg | 0.51 |
| Ambient air temperature min | °C | 1 |
| Ambient air temperature max | °C | 45 |
| Ingress protection rating | - | IP44 Zone 1 |
| Impeller material | - | Plastic |

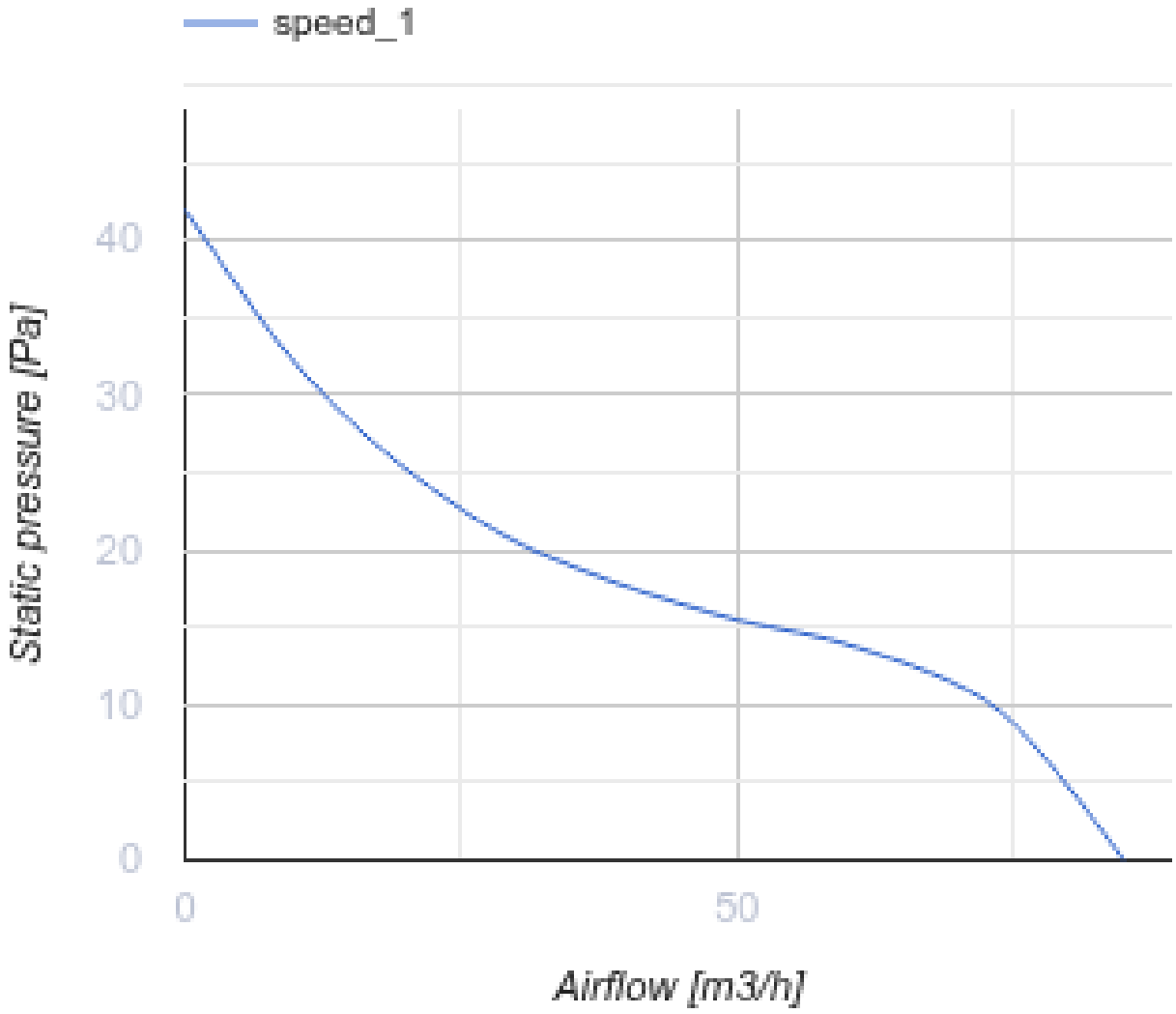


## Dimensions

| Ø D | B | L | L1 |
|---|---|---|---|
| 99 | 160 | 79 | 38 |

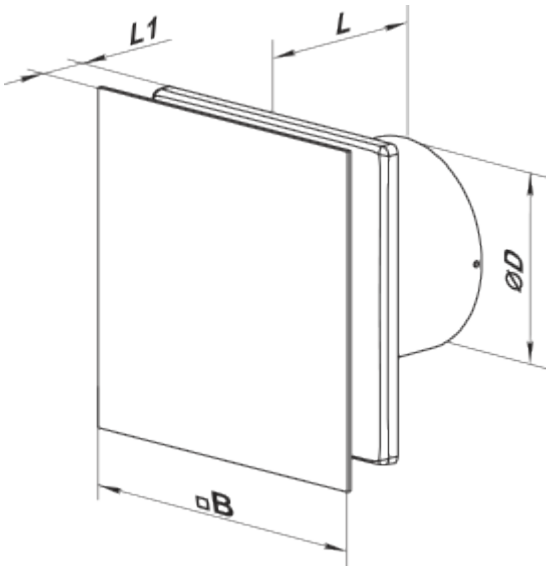


## Accessories

### Plastic

| Name | Photo | Description |
|---|---|---|
| MV 100 V |  | Two-piece plastic grilles with angled louvers |

### Fittings

| Name | Photo | Description |
|---|---|---|
| PVT 050/10 |  | The adhesive PVC tape is an insulation tape made of plasticized PVC base covered with a glue layer |
| PVT 050/30 |  | The adhesive PVC tape is an insulation tape made of plasticized PVC base covered with a glue layer |
| PVT 050/50 |  | The adhesive PVC tape is an insulation tape made of plasticized PVC base covered with a glue layer |
| C 100 |  | The clamps are designed for quick and reliable mounting and connection of various round ventilation system components. Clamps are made of stainless steel band |

### Flat duct

| Name | Photo | Description |
|---|---|---|
| 1805 |  | Wall mounting |

### Flexible ducts

| Name | Photo | Description |
|---|---|---|
| Polyvent N |  | Flexible uninsulated air duct made of metallized film |

### Backdraft dampers

| Name | Photo | Description |
|---|---|---|
| KO 100 |  | Back valve is designed for domestic fan |
| KO1 100 |  | Back valve is designed for domestic fan |

### Window vents

| Name | Photo | Description |
|---|---|---|
| PO 400 |  | Window ventilators for supply ventilation |

### Plastic

| Name | Photo | Description |
|---|---|---|
| MV 102 VK |  | Supply and exhaust hoods |

### Metal

| Name | Photo | Description |
|---|---|---|
| MVM 102 V N |  | Exhaust metal hoods |