100 Solid Glass (220 V/60 Hz) T1

Axial fans with glass panels for extract ventilation suitable for use in Zone 1

- Casing material: Plastic
- Backdraft protection: Backdraft damper
- Timer: Turn on timer, Turn off timer



	Unit of measurement	100 Solid Glass (220 V/60 Hz) T1
Connected air duct size	mm	100
Minimum supply voltage	V	220
Maximum supply voltage	V	220
Power supply frequency	Hz	60
Weight	kg	0.51
Ambient air temperature max	°C	45
Ambient air temperature min	°C	1
Ingress protection rating	-	IP44 Zone 1
Impeller material	-	Plastic

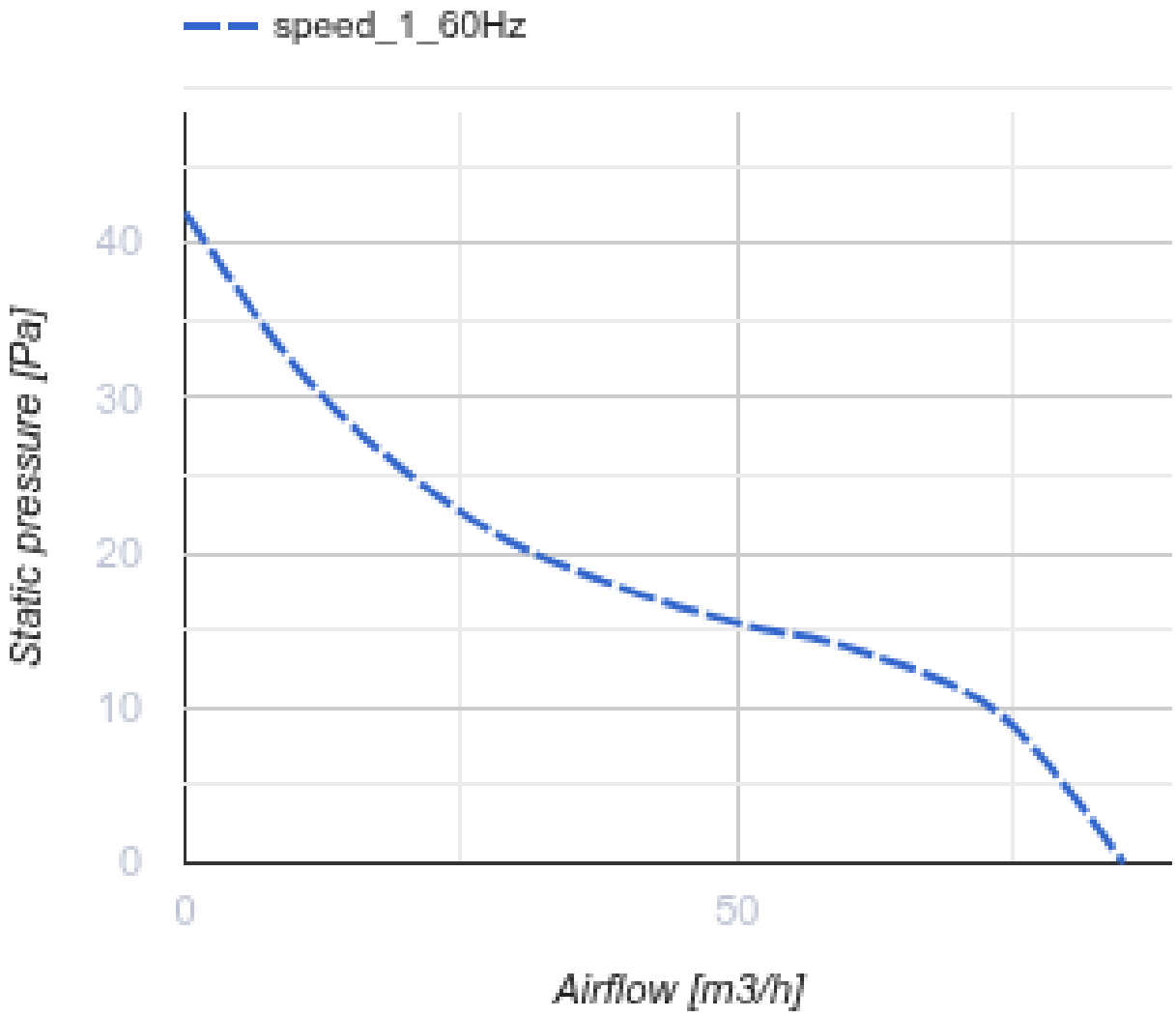

Dimensions

Ø D	B	L	L1
99	160	79	38

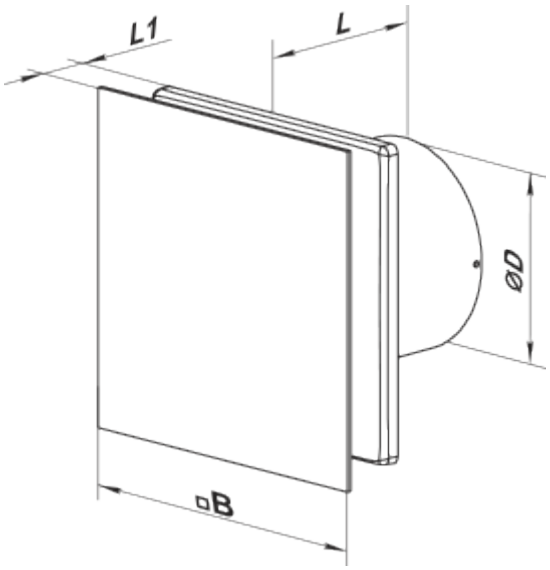

Accessories

Flanges

Name	Photo	Description
FO 100		The window flange