# 100 Solid Glass (220 V/60 Hz) Black

Axial fans with glass panels for extract ventilation suitable for use in Zone 1

- Casing material: Plastic
- Backdraft protection: Backdraft damper



| | Unit of measurement | 100 Solid Glass (220 V/60 Hz) Black |
|---|---|---|
| Connected air duct size | mm | 100 |
| Minimum supply voltage | V | 220 |
| Maximum supply voltage | V | 220 |
| Power supply frequency | Hz | 60 |
| Weight | kg | 0.51 |
| Ambient air temperature min | °C | 1 |
| Ambient air temperature max | °C | 45 |
| Ingress protection rating | - | IP44 Zone 1 |
| Impeller material | - | Plastic |

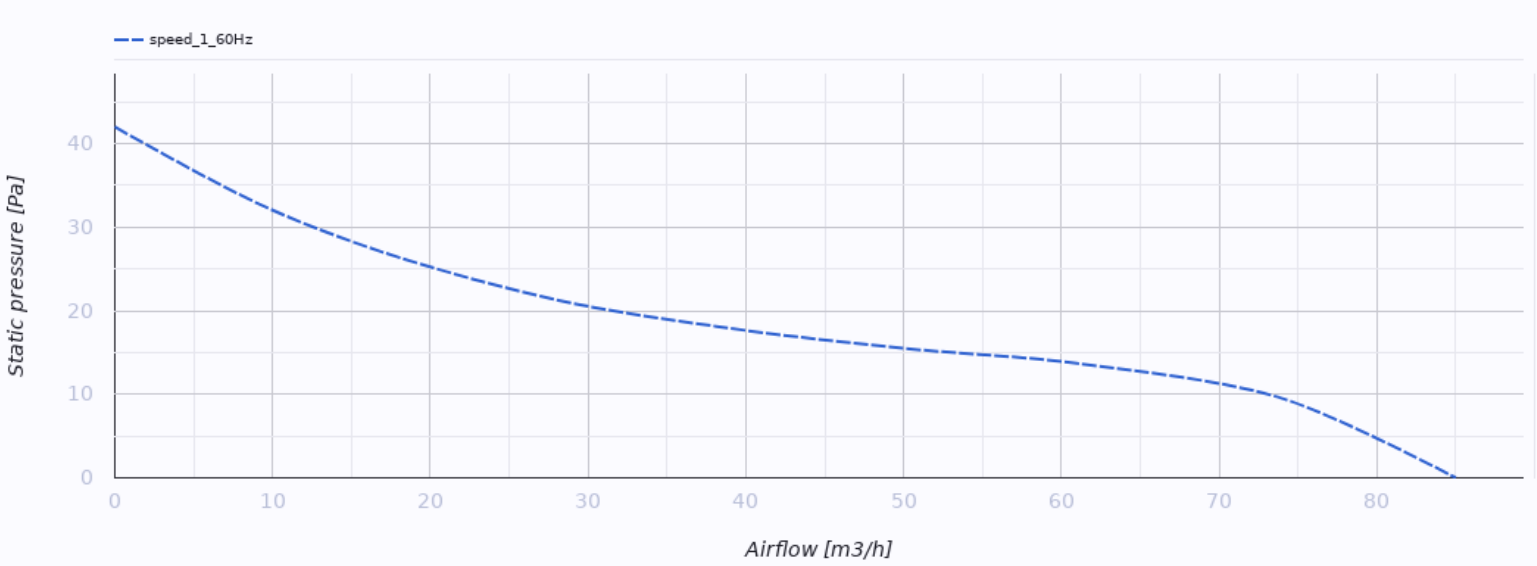


## Dimensions

| Ø D | B | L | L1 |
|---|---|---|---|
| 99 | 160 | 79 | 38 |

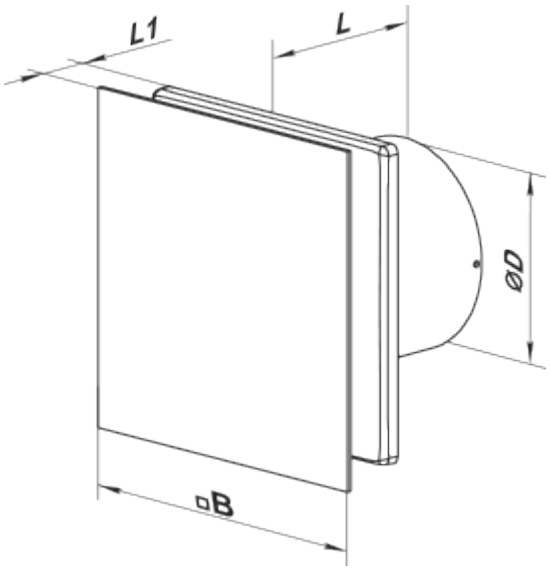


## Accessories

### Flanges

| Name | Photo | Description |
|---|---|---|
| FO 100 |  | The window flange |