100 LP T



Axial extract fan with a thin front panel and a short spigot

- Sound pressure level LpA at 3 m: 36
- Casing material: Plastic
- Short spigot
- Timer: Turn off timer

	Unit of measurement	100 LP T
Connected air duct size	mm	100
Phases	-	1
Minimum supply voltage	V	220
Maximum supply voltage	V	240
Power supply frequency	Hz	50/60
Rated power	W	14
Unit current	A	0.097
Maximum airflow	m^3/h	94
Rotation speed at 50hz	-	2400
Sound pressure level LpA at 3 m	dB(A)	36
Weight	kg	0.55
Ambient air temperature min	°C	1
Ambient air temperature max	°C	40
Ingress protection rating	-	IP24
Impeller material	-	Plastic

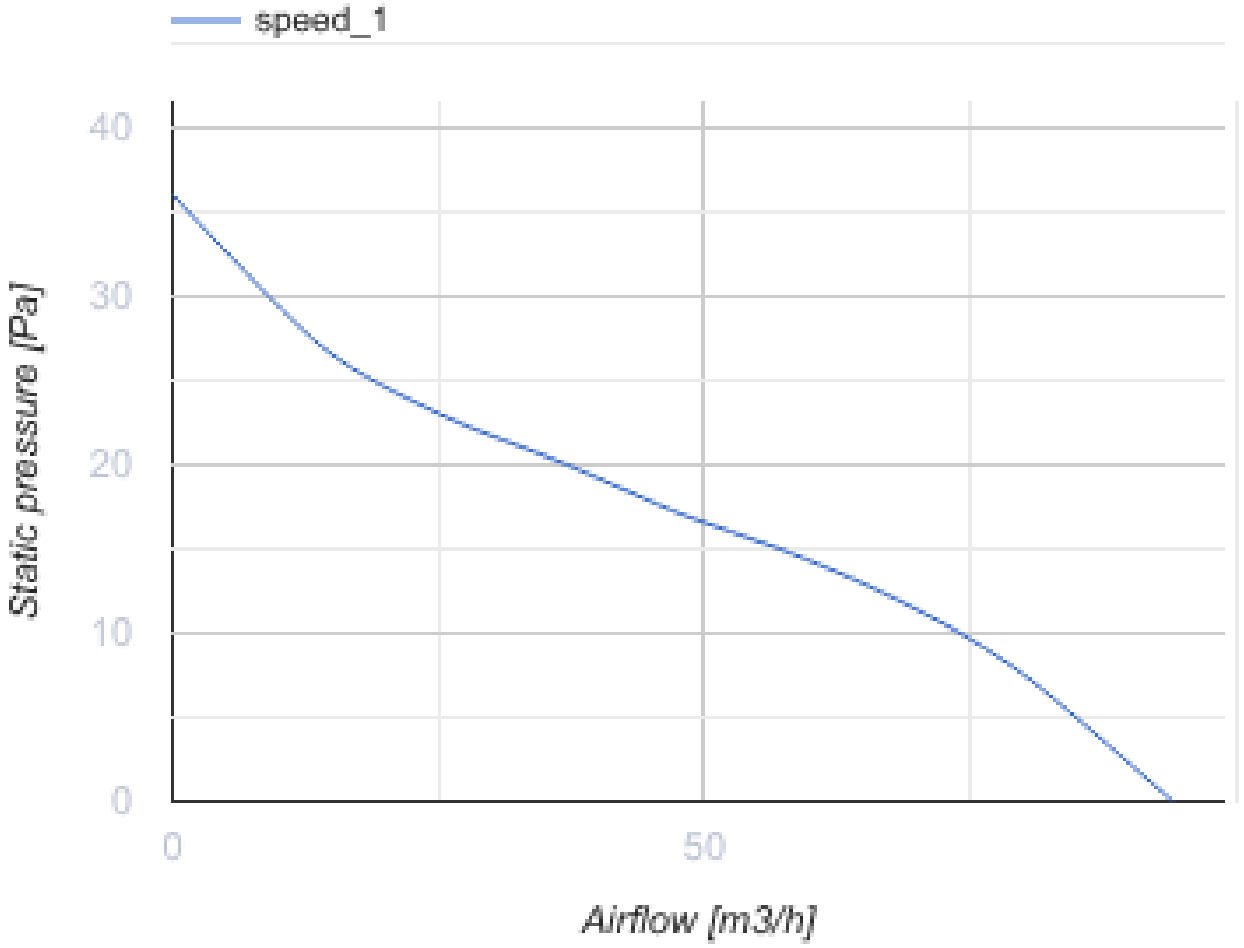

Dimensions

Ø D	B	L	L1
100	154	50	22

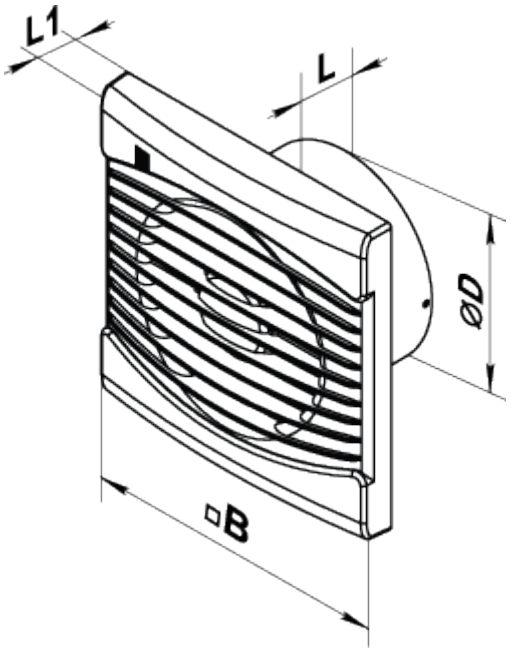
L1
L
ØD
□B

Ecodesign

Trademark	Vents					
Model	100 LP T					
Specific energy consumption (SEC) (kWh/(m²/a))	Cold		Average		Warm	
	-28.9	B	-12.5	E	-3.1	F
Type of ventilation unit	Unidirectional					
Type of drive installed	Single speed					
Type of heat recovery system	None					
Maximum flow rate (m³/h)	94					
Electric power input (W)	14					
Reference flow rate (m³/s)	0.018					
Specific power input (SPI) (W/(m³/h))	0.149					
Control typology	Manual control					
Maximum external leakage rates (%)	2.7					
Declared typology	RVU UVU					
Sound power level (dB(A))	56					
The annual electricity consumption (AEC) (kWh/a)	Cold		Average		Warm	
	187		187		187	
The annual heating saved (AHS) (kWh/a)	Cold		Average		Warm	
	3355		1715		776	