100 Evo EC Q black



Axial decorative exhaust fans with a decorative front panel, equipped with EC motors

- Sound pressure level LpA at 3 m: 22
- Impeller type: Axial
- Casing material: Plastic
- Short spigot
- Backdraft protection: Backdraft damper
- Ball bearing

	Unit of measurement	100 Evo EC Q black
Connected air duct size	mm	100
Minimum supply voltage	V	100
Maximum supply voltage	V	240
Power supply frequency	Hz	50/60
Rated power	W	2
Unit current	A	0.02
Maximum airflow	m^3/h	50
Rotation speed at 50hz	-	2300
Sound pressure level LpA at 3 m	dB(A)	22
Weight	kg	0.56
Ambient air temperature min	°C	1
Ambient air temperature max	°C	40
Ingress protection rating	-	IP24
Impeller material	-	Plastic

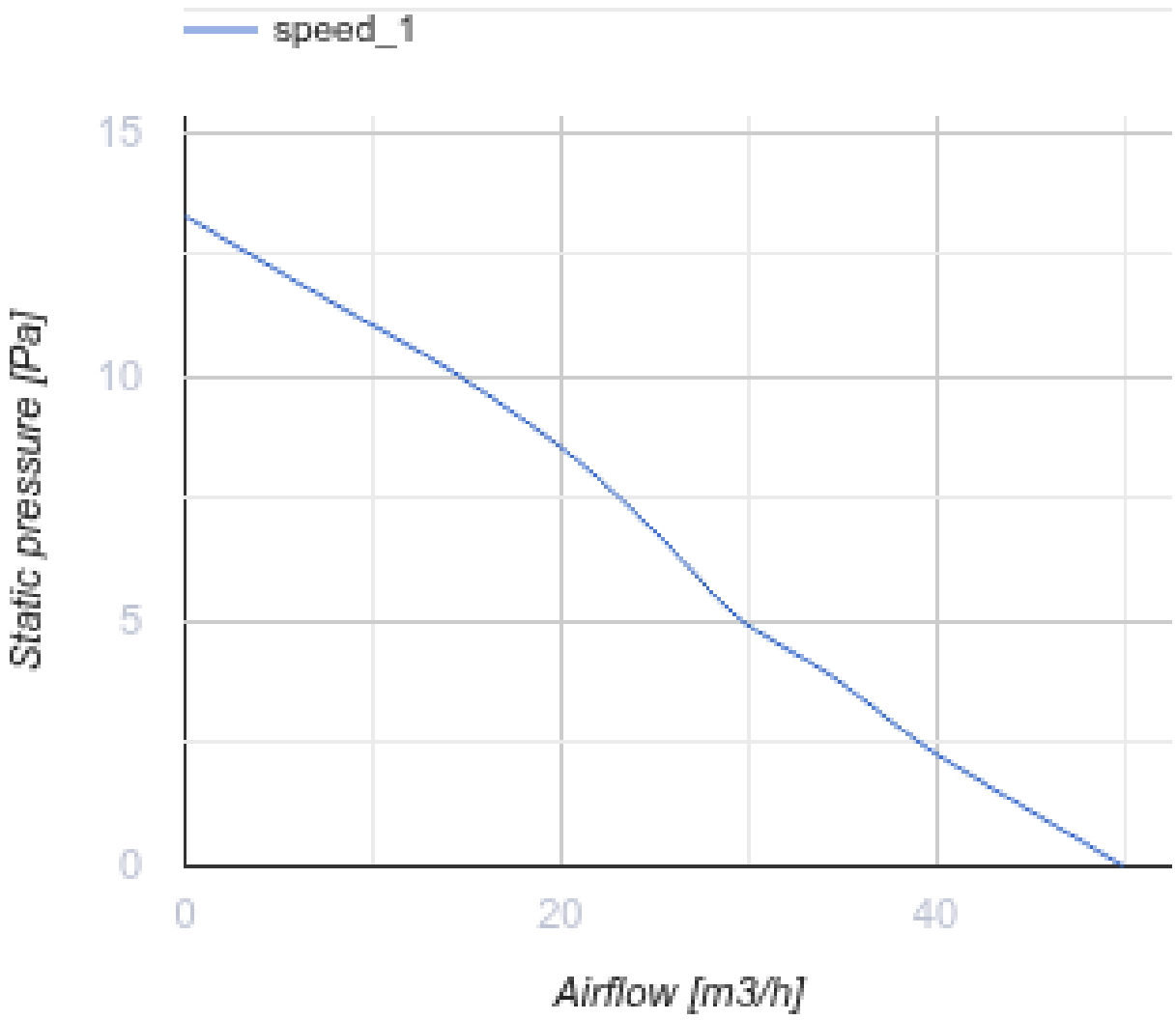

Dimensions

ØD	B	L	L1
100	180	37	32

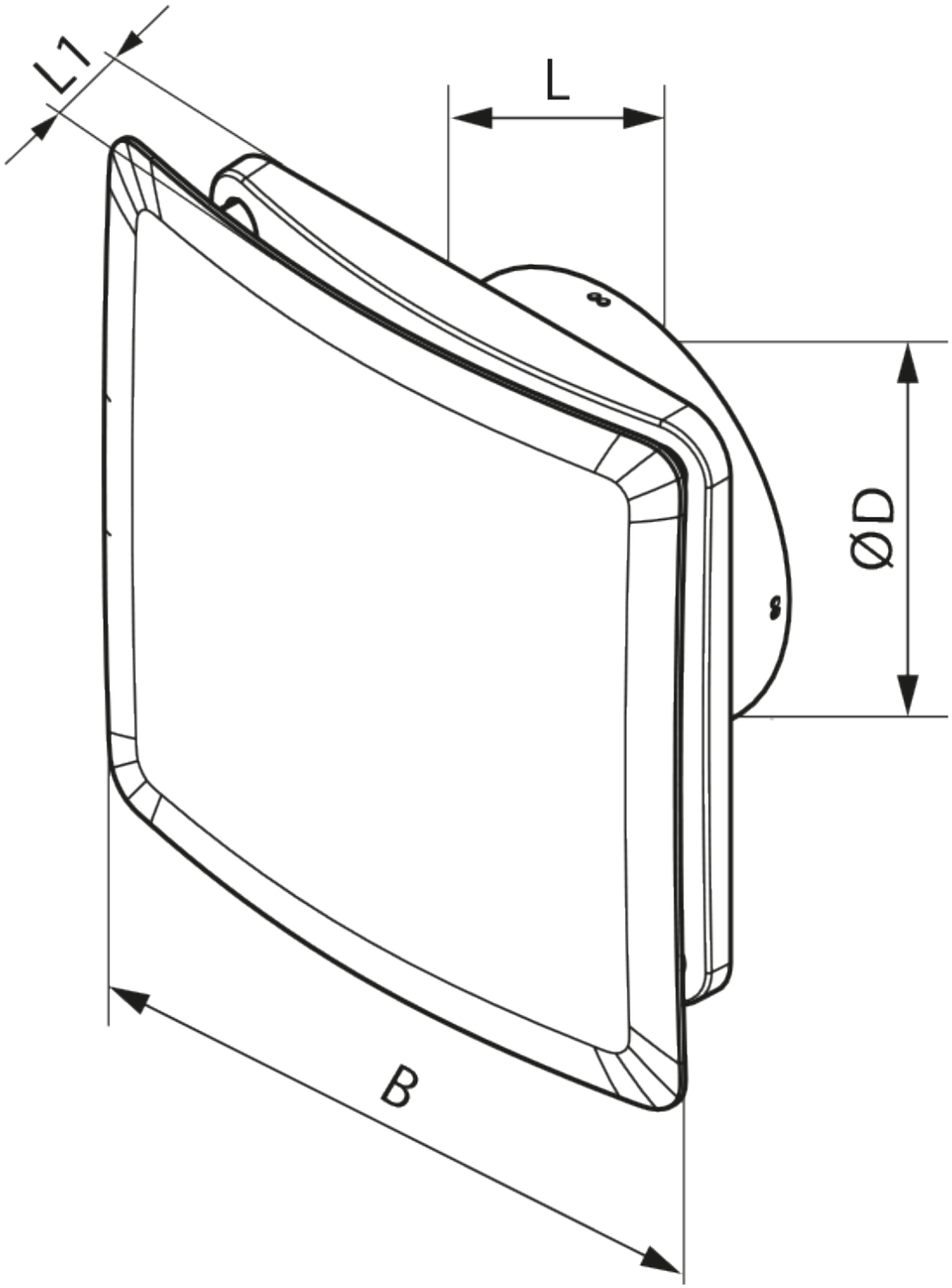
L1
L
ØD
B

Ecodesign

Trademark	Vents					
Model	100 Evo EC Q black					
Specific energy consumption (SEC) (kWh/(m²/a))	Cold		Average		Warm	
	-32.3	B	-15.9	E	-6.5	F
Type of ventilation unit	Unidirectional					
Type of drive installed	Single speed					
Maximum flow rate (m³/h)	50					
Electric power input (W)	2					
Reference flow rate (m³/s)	0.01					
Specific power input (SPI) (W/(m³/h))	0.04					
Control typology	Manual control					
Maximum external leakage rates (%)	2.7					
Sound power level (dB(A))	42					
The annual electricity consumption (AEC) (kWh/a)	Cold		Average		Warm	
	50		50		50	
The annual heating saved (AHS) (kWh/a)	Cold		Average		Warm	
	3355		1715		776	