100 Ace T K L

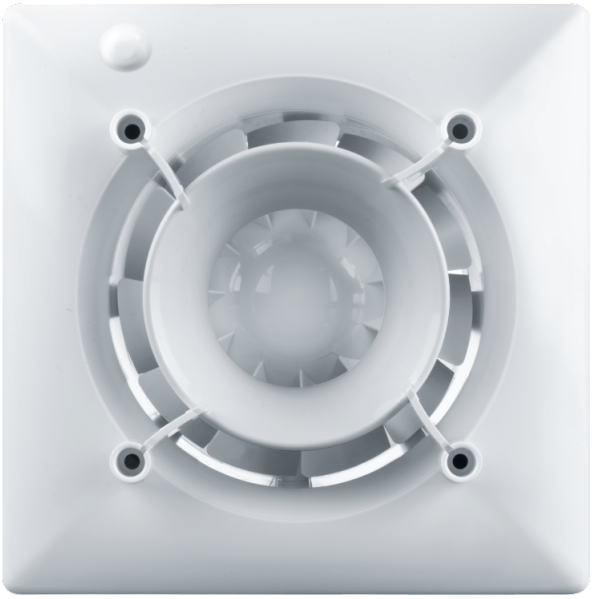

Quiet axial extract fans compatible with the Design decorative panels

- Sound pressure level LpA at 3 m: 29
- Impeller type: Mixed-flow
- Casing material: Plastic
- Backdraft protection: Backdraft damper
- Timer: Turn off timer
- Ball bearing

	Unit of measurement	100 Ace T K L
Connected air duct size	mm	100
Phases	-	1
Minimum supply voltage	V	220
Maximum supply voltage	V	240
Power supply frequency	Hz	50
Rated power	W	8
Unit current	A	0.05
Maximum airflow	m^3/h	90
Rotation speed at 50hz	-	2165
Sound pressure level LpA at 3 m	dB(A)	29
Ambient air temperature min	°C	1
Ambient air temperature max	°C	40
Ingress protection rating	-	IP44
Impeller material	-	Plastic

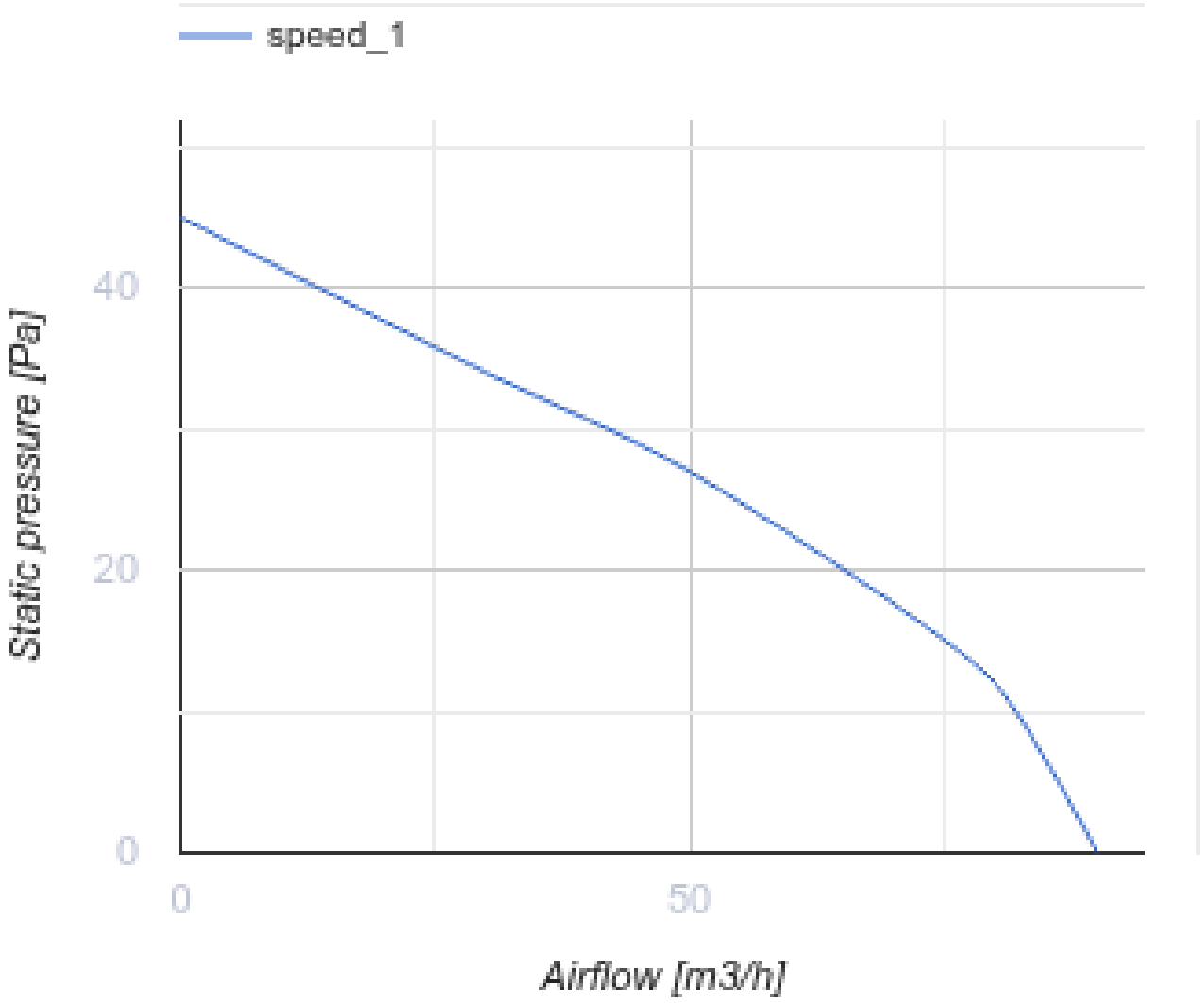

Dimensions

ØD	B	L	L1
99	151	79	36

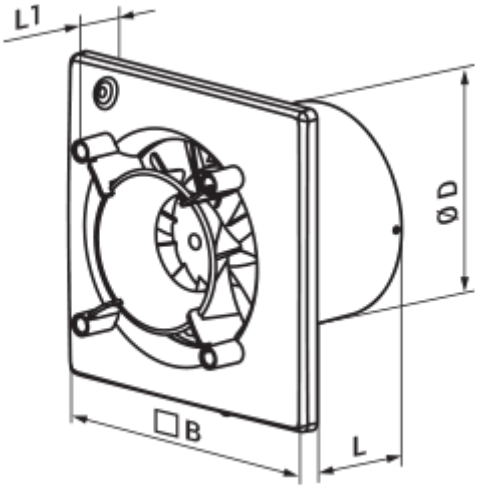

Accessories

Plastic

Name	Photo	Description
MV 100 V		Two-piece plastic grilles with angled louvers

Fittings

Name	Photo	Description
PVT 050/10		The adhesive PVC tape is an insulation tape made of plasticized PVC base covered with a glue layer
PVT 050/30		The adhesive PVC tape is an insulation tape made of plasticized PVC base covered with a glue layer
PVT 050/50		The adhesive PVC tape is an insulation tape made of plasticized PVC base covered with a glue layer
C 100		The clamps are designed for quick and reliable mounting and connection of various round ventilation system components. Clamps are made of stainless steel band

Flat duct

Name	Photo	Description
1805		Wall mounting

Flexible ducts

Name	Photo	Description

Polyvent N		Flexible uninsulated air duct made of metallized film

Decorative panels

Name	Photo	Description
FP 180 Plain		Removable decorative front panels are a universal solution allowing to choose the design of a fan or ventilation grille for any interior of a bathroom or kitchen.
FP 160 Plain		Removable decorative front panels are a universal solution allowing to choose the design of a fan or ventilation grille for any interior of a bathroom or kitchen.
FP 180 Plain red		Removable decorative front panels are a universal solution allowing to choose the design of a fan or ventilation grille for any interior of a bathroom or kitchen.
FP 160 Plain red		Removable decorative front panels are a universal solution allowing to choose the design of a fan or ventilation grille for any interior of a bathroom or kitchen.
FP 180 Plain black sapphire		Removable decorative front panels are a universal solution allowing to choose the design of a fan or ventilation grille for any interior of a bathroom or kitchen.
FP 160 Plain black sapphire		Removable decorative front panels are a universal solution allowing to choose the design of a fan or ventilation grille for any interior of a bathroom or kitchen.
FP 180 Plain metallic		Removable decorative front panels are a universal solution allowing to choose the design of a fan or ventilation grille for any interior of a bathroom or kitchen.
FP 180 Plain wing		Removable decorative front panels are a universal solution allowing to choose the design of a fan or ventilation grille for any interior of a bathroom or kitchen.
FP 180 Aqua		Removable decorative front panels are a universal solution allowing to choose the design of a fan or ventilation grille for any interior of a bathroom or kitchen.
FP 180 Mars		Removable decorative front panels are a universal solution allowing to choose the design of a fan or ventilation grille for any interior of a bathroom or kitchen.
FP 180 Mystery		Removable decorative front panels are a universal solution allowing to choose the design of a fan or ventilation grille for any interior of a bathroom or kitchen.
FP 160 Reef		Removable decorative front panels are a universal solution allowing to choose the design of a fan or ventilation grille for any interior of a bathroom or kitchen.
FP 160 Frizz		Removable decorative front panels are a universal solution allowing to choose the design of a fan or ventilation grille for any interior of a bathroom or kitchen.

FP 180 Plain chrome		Removable decorative front panels are a universal solution allowing to choose the design of a fan or ventilation grille for any interior of a bathroom or kitchen.
FP 160 Plain chrome		Removable decorative front panels are a universal solution allowing to choose the design of a fan or ventilation grille for any interior of a bathroom or kitchen.
FP 180 Plain alumat		Removable decorative front panels are a universal solution allowing to choose the design of a fan or ventilation grille for any interior of a bathroom or kitchen.
FP 160 Plain alumat		Removable decorative front panels are a universal solution allowing to choose the design of a fan or ventilation grille for any interior of a bathroom or kitchen.
FPA 160 Glass-1		Removable decorative front panels are a universal solution allowing to choose the design of a fan or ventilation grille for any interior of a bathroom or kitchen.
FPA 180/100 Glass-1		Removable decorative front panels are a universal solution allowing to choose the design of a fan or ventilation grille for any interior of a bathroom or kitchen.
FPA 160 Glass-1 red		Removable decorative front panels are a universal solution allowing to choose the design of a fan or ventilation grille for any interior of a bathroom or kitchen.
FPA 180/100 Glass-1 red		Removable decorative front panels are a universal solution allowing to choose the design of a fan or ventilation grille for any interior of a bathroom or kitchen.
FPA 160 Glass-1 black		Removable decorative front panels are a universal solution allowing to choose the design of a fan or ventilation grille for any interior of a bathroom or kitchen.
FPA 180/100 Glass-1 black		Removable decorative front panels are a universal solution allowing to choose the design of a fan or ventilation grille for any interior of a bathroom or kitchen.
FP 180 Plain gold		Removable decorative front panels are a universal solution allowing to choose the design of a fan or ventilation grille for any interior of a bathroom or kitchen.
FP 180 Plain dim		Removable decorative front panels are a universal solution allowing to choose the design of a fan or ventilation grille for any interior of a bathroom or kitchen.

Window vents

Name	Photo	Description
PO 400		Window ventilators for supply ventilation

Plastic

Name	Photo	Description

MV 102 VK		Supply and exhaust hoods

Metal

Name	Photo	Description
MVM 102 V N		Exhaust metal hoods